E33 Gas Insert

Model	E33-NG1	E33-LP1
Fuel Type	Natural Gas	Propane
Minimum Supply Pressure	5” W.C. (1.25 kPa)	12” W.C. (2.99 kPa)
Manifold Pressure - High	3.8” W.C. (0.95 kPa)	11” W.C. (2.74 kPa)
Manifold Pressure - Low	1.1” W.C. (0.27 kPa)	2.9” W.C. (0.72 kPa)
Orifice Size -**Altitude 0-4500 ft.**	#31 DMS	#50 DMS
Minimum Input **Altitude 0-4500 ft. (0-1372m)**	20,000 BTU/h (5.86 kW)	19,000 BTU/h (5.57 kW)
Maximum Input **Altitude 0-4500 ft. (0-1372m)**	38,000 BTU/h (11.14 kW)	35,500 BTU/h (10.40 kW)
Vent Sizing	3” Co-linear	3” Co-linear

Approved Venting Systems	
Flex Vent Systems:	**FPI AstroCap™ Flex Vent**

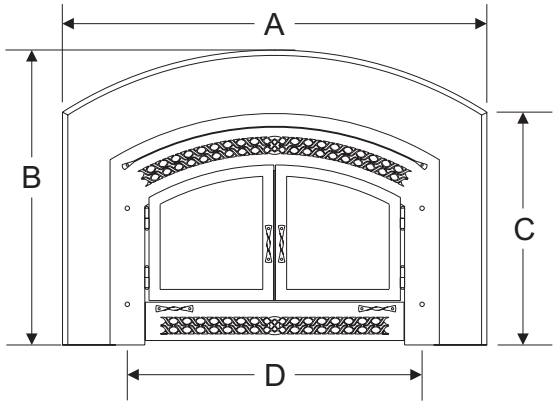

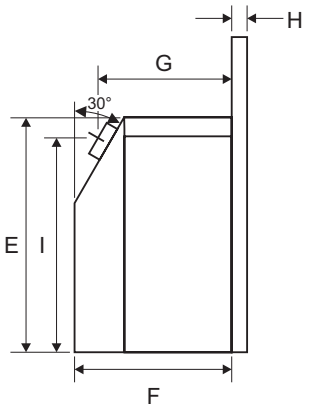

Dimension	Description	E33
A	Faceplate Width	45-9/16” (1143mm)
B	Faceplate Height to center	33-1/4” (845mm)
C	Faceplate Height to corner	26-1/2” (673mm)
D	Unit Width	32-1/4” (819mm)
E	Unit Height	23-13/16” (605mm)
F	Unit Depth	16-3/4” (426mm)
G	Faceplate to Vent Centerline	11-1/4” (286mm)
H	Faceplate Depth	1-3/8” (35mm)
I	Height to Vent Collar	23” (583mm)

Minimum Fireplace Dimensions

The minimum fireplace dimensions for the FPI gas fireplace insert are shown in the following diagrams:

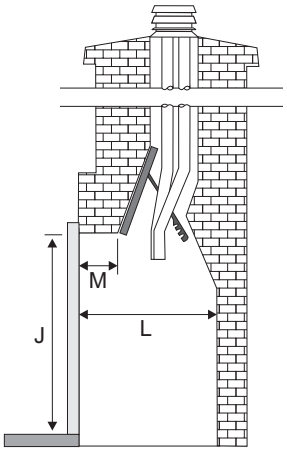

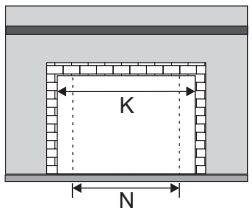

Dimension	Description	Excalibur Surround
J	Height	26” (876mm)
K	Width	34-1/2” (876mm)
L	Depth	17-3/4” (451mm)
M	Max. Lintel Bar Depth	9” (229mm)
N	Rear Width	25” (635mm)

E33 Gas Insert

Clearances

Unless otherwise stated the clearances listed below are Minimum distances to combustible materials. **Please Note: A major cause of chimney related fires is due to a failure to maintain required clearances (air space) to combustible materials. It is of the greatest importance that this fireplace and vent system be installed only in accordance with these instructions.**

Clearances to Combustibles		
Dimension	**Description**	**U31**
A	Minimum Mantel Height	15 ” (381mm)
B*	From Unit to Sides	8” (203mm)
C	From Unit to Ceiling	47” (1194mm)
D	Maximum Mantel Depth	12” (305mm)
E	Minimum Alcove Width	76” (1930mm)
F	Maximum Alcove Depth	36” (914mm)
G***	Hearth Height***	1-¼” (32mm)
H***	Hearth Depth***	45-½” (1156mm)
I***	Hearth Width***	13” (330mm)
***Hearth must be Non-combustible		
* Alcove side wall must have a minimum of 8” (203mm) clearance on one side.		

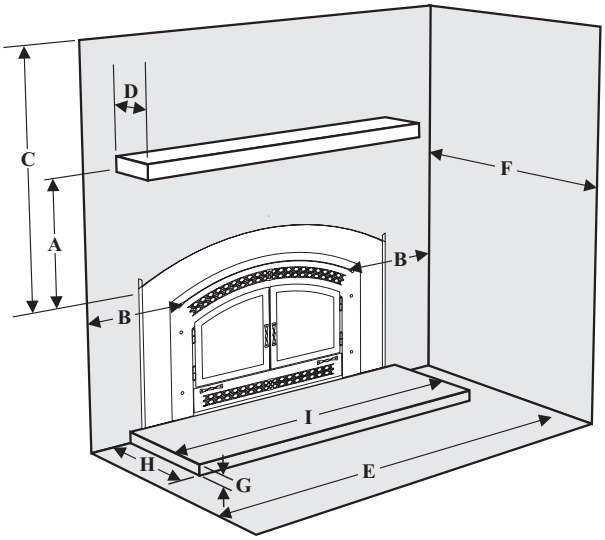

Combustible Mantels

Because of the extreme heat this fireplace emits, the mantel clearances are critical. Combustible mantel clearances from top of the louvers are shown in the diagram below. Mantel may be installed anywhere in the shaded area or higher.

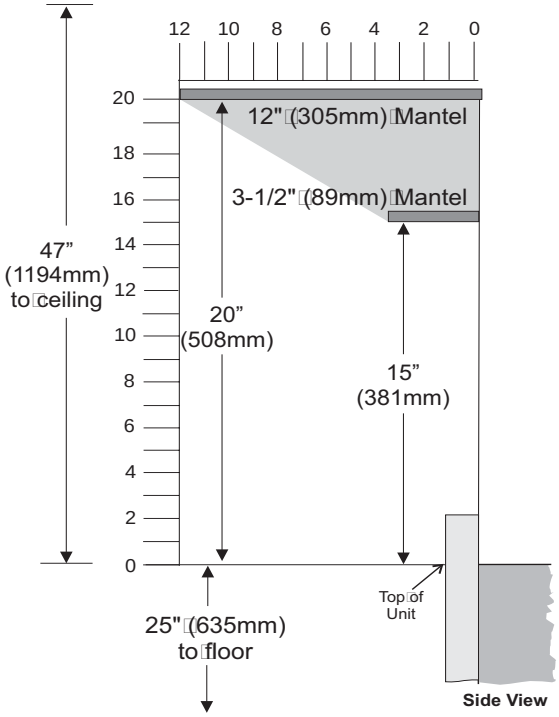

Note: A non-combustible mantel may be installed at a lower height if the framing is made of metal studs covered with a non-combustible board.

Note: Ensure the paint that is used on the mantel and the facing is “heat resistant” or the paint may discolour.